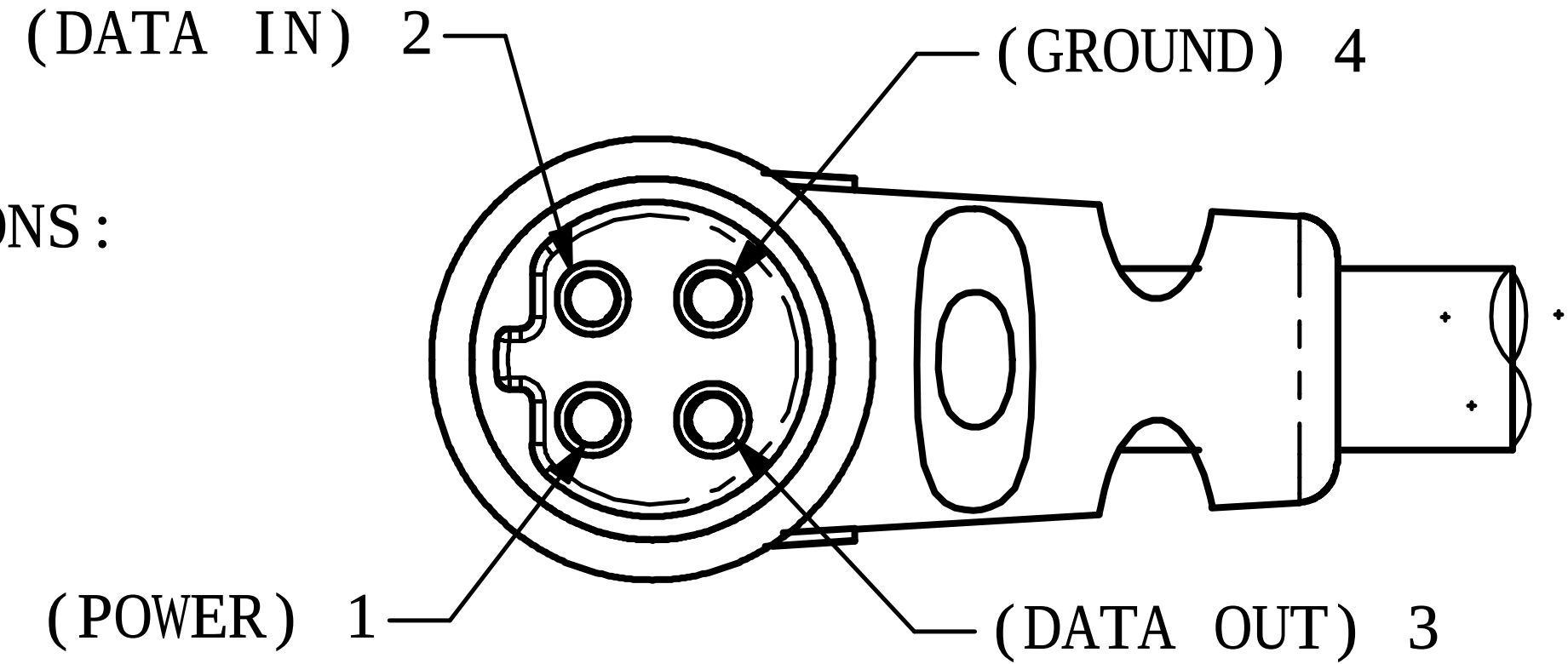
(DATA IN) 2
(GROUND) 4
ONS:
(POWER) 1
(DATA OUT) 3